RAPID VALVES
Always in Control

Cast Steel Swing Check Valve

Body to Cover Joint designed to apply a uniform load to the gasket to assure a leak proof seal. Seat Ring are seal welded to provide a bubble tight joint.

Disc-to-Hanger connection allows the disc a controlled movement independent of the hanger to assure proper disc alignment with the seal at closer.

The connection is secured by a welded disc nut to prevent disassembly due to vibration and closure impact.
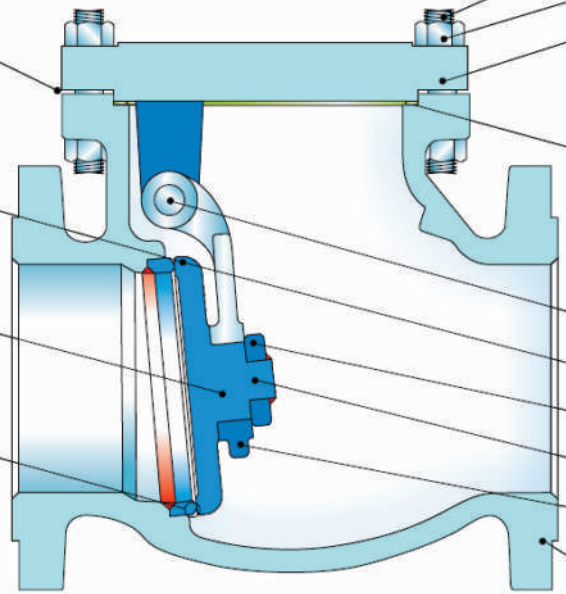
Stellited Seat Ring provides incresed resistance to wear abrasion and erosion of the sealing surface.